DIFFERENTIAL CASE

COMPONENTS

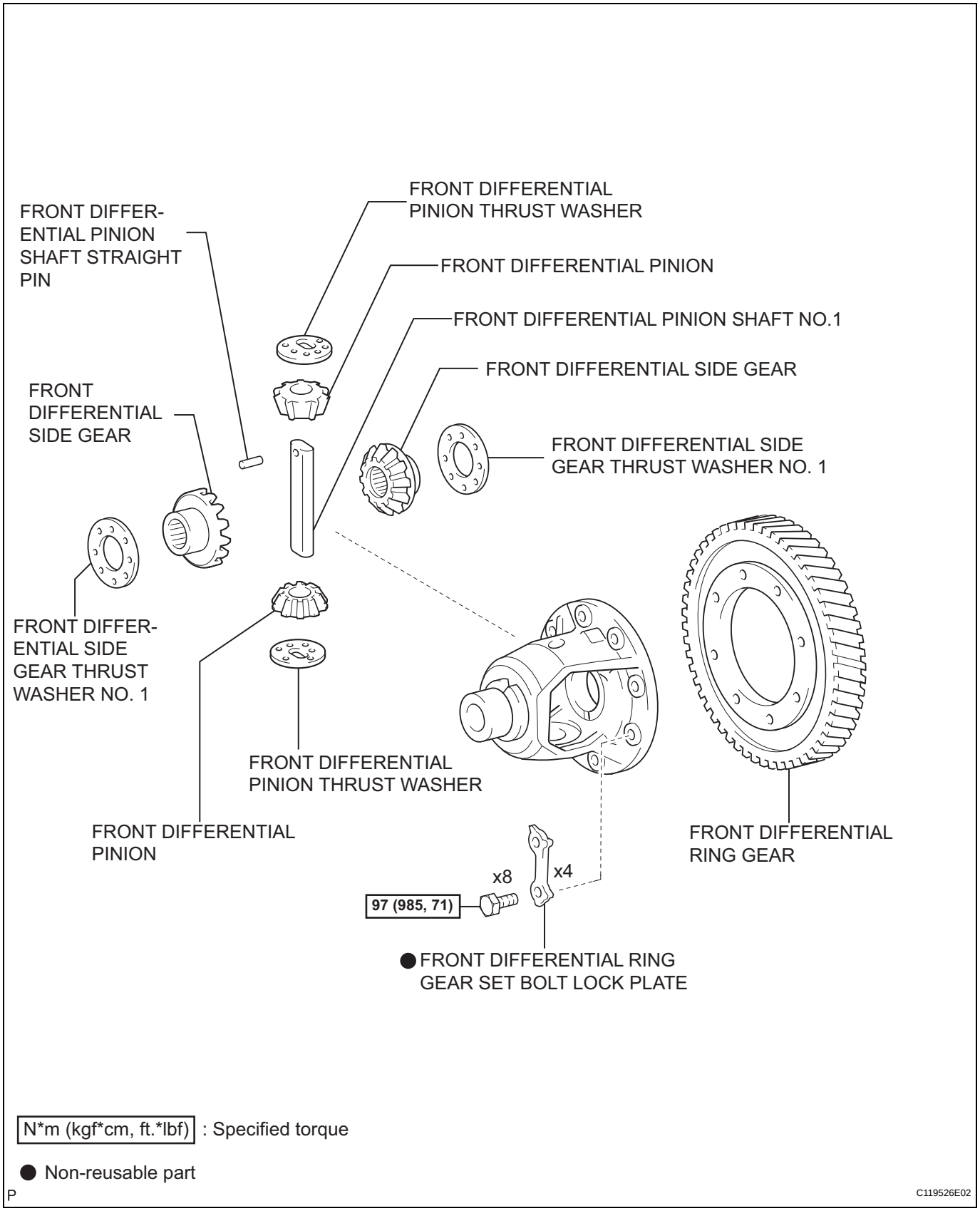

N*m (kgf*cm, ft.*lbf) : Specified torque

● Non-reusable part

P

C119526E02

AX

DISASSEMBLY

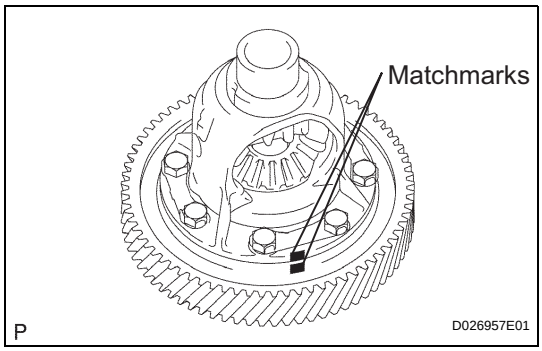

1. REMOVE FRONT DIFFERENTIAL RING GEAR

(a) Place the matchmarks on the front differential ring gear and front differential case.

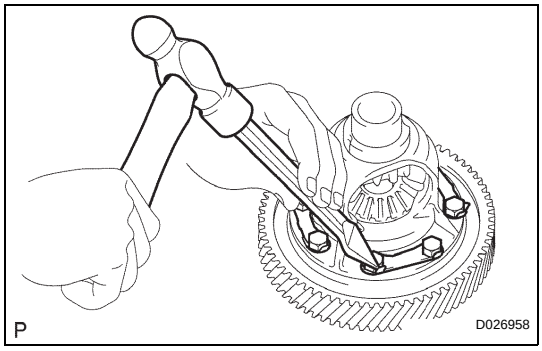

(b) Using a chisel and hammer, loosen the staked part of the front differential ring gear set bolt lock plate.

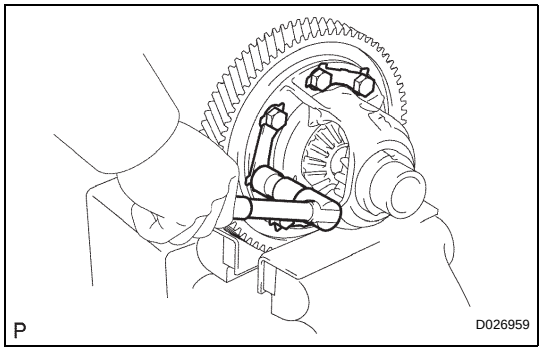

(c) Remove the 8 bolts and 4 front differential ring gear set bolt lock plates.

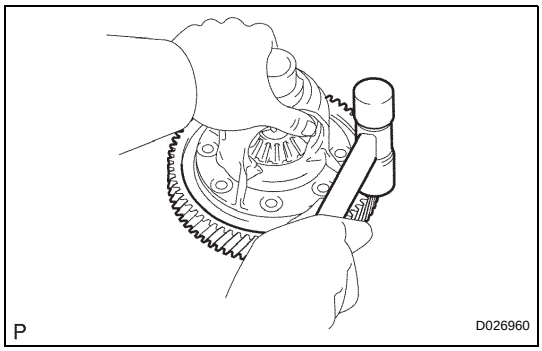

(d) Using a plastic hammer, tap on the front differential ring gear to remove it from the front differential case.

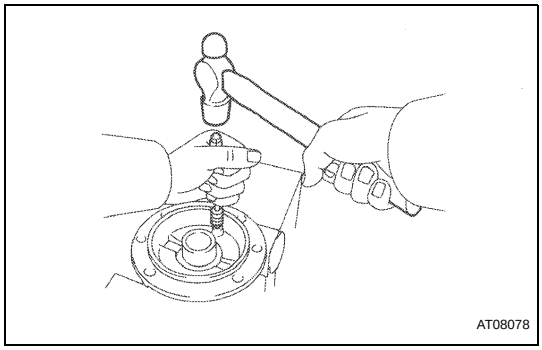

2. REMOVE FRONT DIFFERENTIAL PINION SHAFT STRAIGHT PIN

(a) Using a pin punch and hammer, drive out the front differential pinion shaft straight pin from the front differential case.